Parts List			
ITEM	QTY	DESCRIPTION	MATERIAL
1	1	BODY	316 STAINLESS STEEL
2	1	GASKET	NEOPRENE RUBBER
3	1	PLUG	CAST BRONZE
4	SOLD SEPARATELY	OPERATING WRENCH	ZINC PLATED STEEL

133-V VENTING SOUNDING TUBE

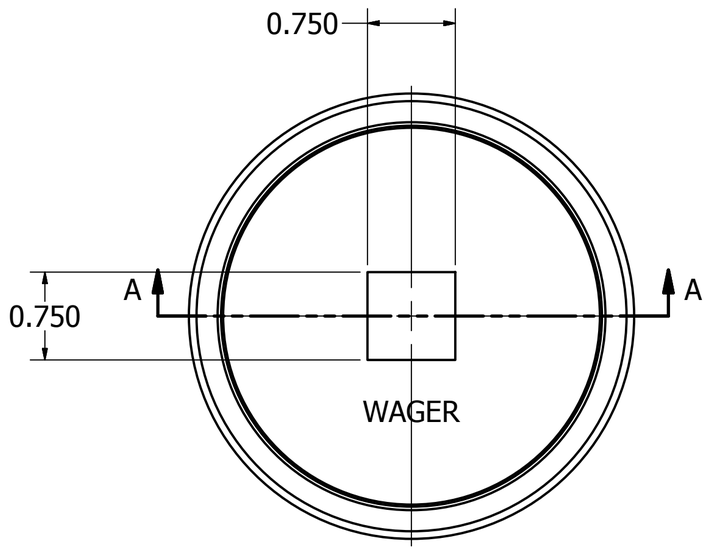

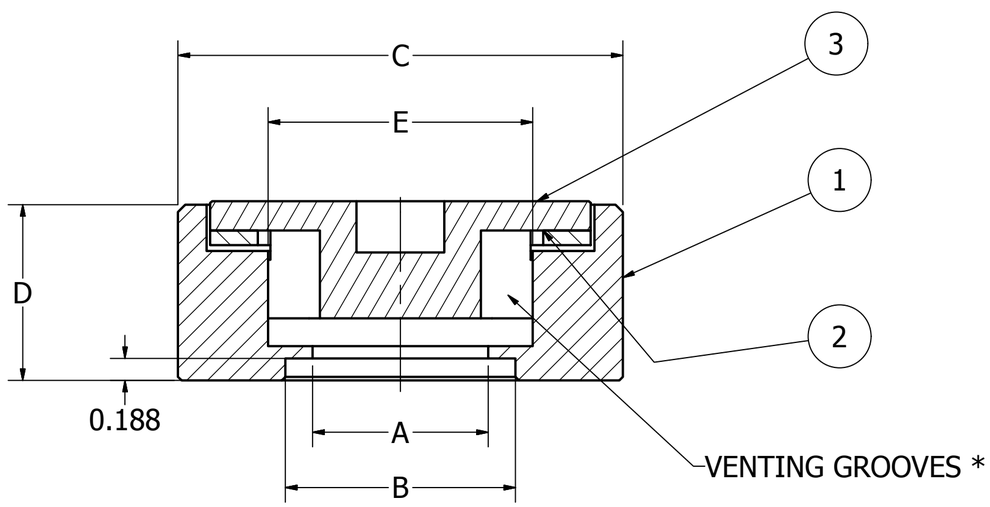

SECTION A-A
SCALE 1 : 1

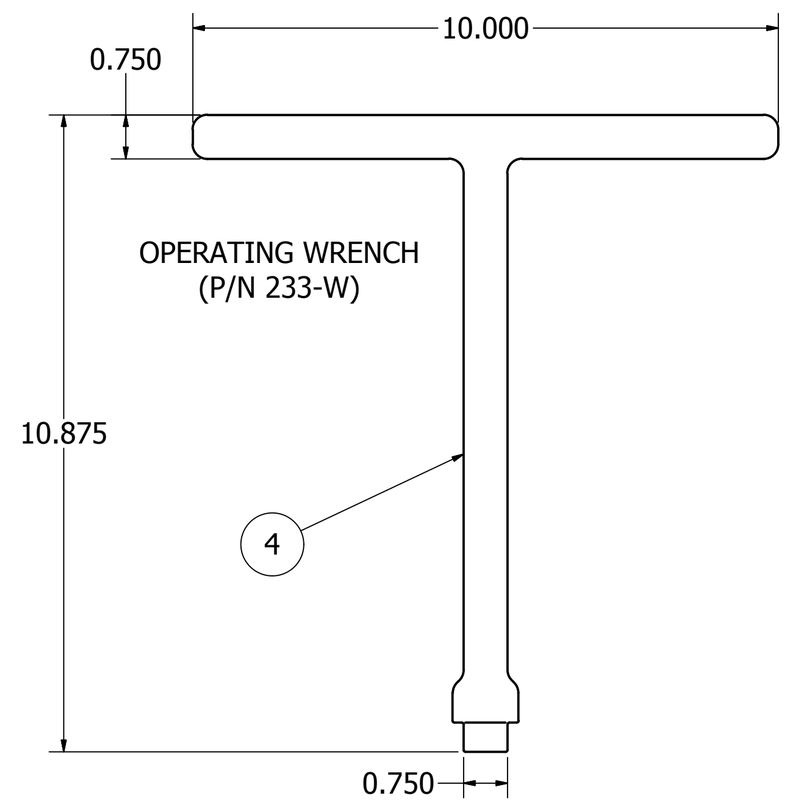

* VENTING STYLE IS OPTIONAL - WHEN ORDERING
ADD A "-V" TO THE PART NUMBER.

PRODUCT DIMENSIONS						
PART NO.	A (SIZE)	B	C	D	E	WEIGHT
1.5-133SOCSS	1.5	1.95-1.98	3.800	1.500	ANSI 2" NPSM	3.5 (LB.)
2-133SOCSS	2	2.44-2.47	3.800	1.500	ANSI 2" NPSM	3.5
2.5-133SOCSS	2.5	2.94-2.97	4.750	1.500	ANSI 3" NPSM	6
3-133SOCSS	3	3.57-3.60	4.750	1.500	ANSI 3" NPSM	6

DRAWN SHARDY	10/27/2006	ROBERT H WAGER CO., INC.
CHECKED		TITLE
QA		MODEL 133 - SOUNDING TUBE
MFG		
APPROVED		SIZE C / DWG NO SERIES 133 / REV
		SCALE / SHEET 1 OF 1