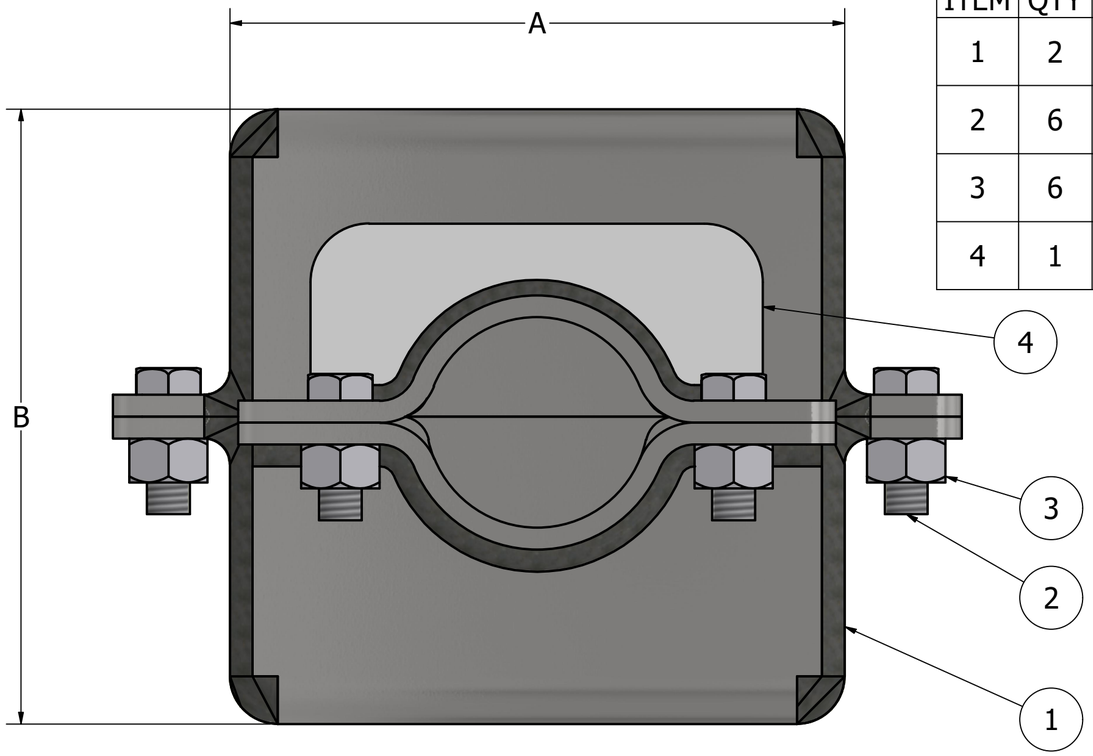

PARTS LIST				
ITEM	QTY	DESCRIPTION	MATERIAL	COMMENTS
1	2	PERFORATED BOX	Galvanized Steel/ 316 Steel	3/8" X 3/4" OVAL STAGGERED HOLES
2	6	ASSEMBLY BOLT	Stainless Steel	3/8-16x 1" 316 SS HEX HEAD
3	6	HEX NUT	Stainless Steel	3/8-16 HEAVY HEX HEAD 316SS
4	1	CLAMPING STRAP	Galvanized Steel/ 316 SS	ADJUSTABLE CLAMP, ONE SIDE ONLY

DIMENSION TABLE					
PIPE ND	A	B	C	D	E
1.5	5.25	5.25	5.00	7.25	4.00
2	5.25	5.25	5.00	7.25	4.00
2.5	5.25	5.25	5.00	7.25	4.00
3	5.25	5.25	5.00	7.25	4.00
4	11.00	11.00	13.00	13.00	11.00
5	11.50	11.50	13.50	14.125	11.50
6	11.50	11.50	13.50	14.125	11.50
8	15.00	15.00	18.00	18.00	16.50
10	15.00	15.00	18.00	18.00	16.50
12	17.00	16.00	19.50	20.00	17.50

Rosebox strainers meet the 46CFR 56.50-50(g) requirement for the open area of the strainer to be at least 3 times the area of the suction pipe.

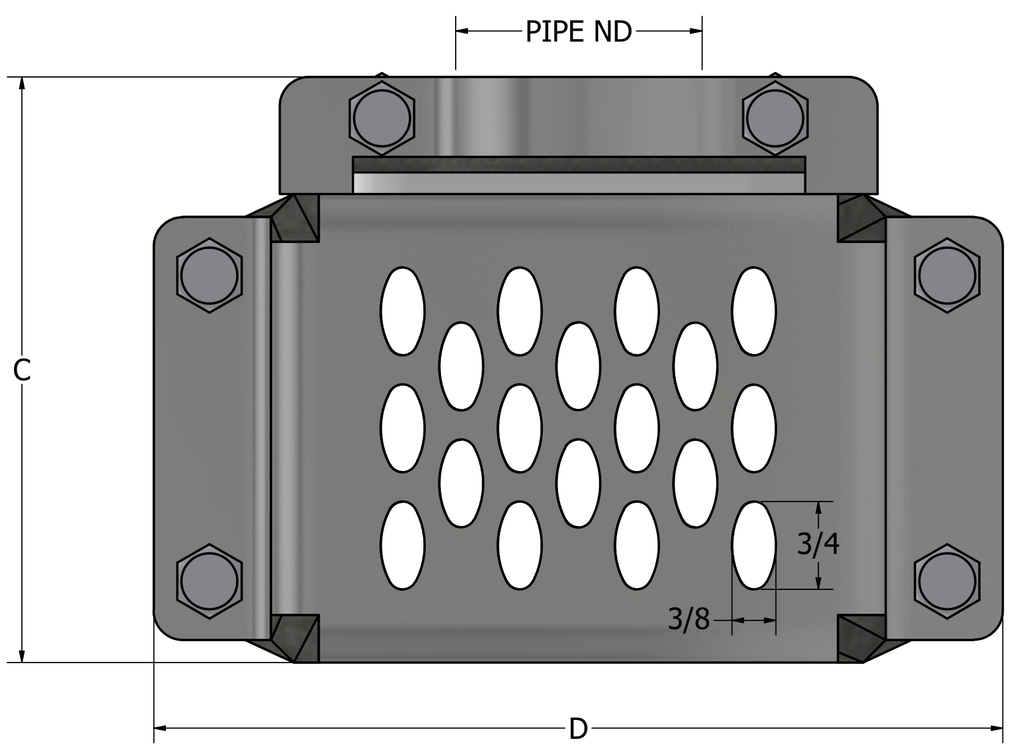

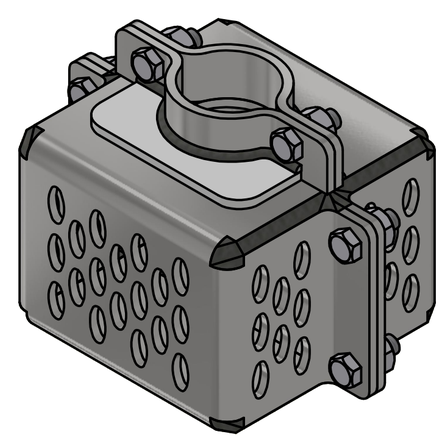

DRAWN SHARDY	6/1/2023	ROBERT H. WAGER CO., INC.
CHECKED		TITLE
QA		SUCTION ROSEBOX STRAINER
MFG		
APPROVED		SIZE C / DWG NO SRS CUT SHEET / REV
		SCALE / SHEET 1 OF 1